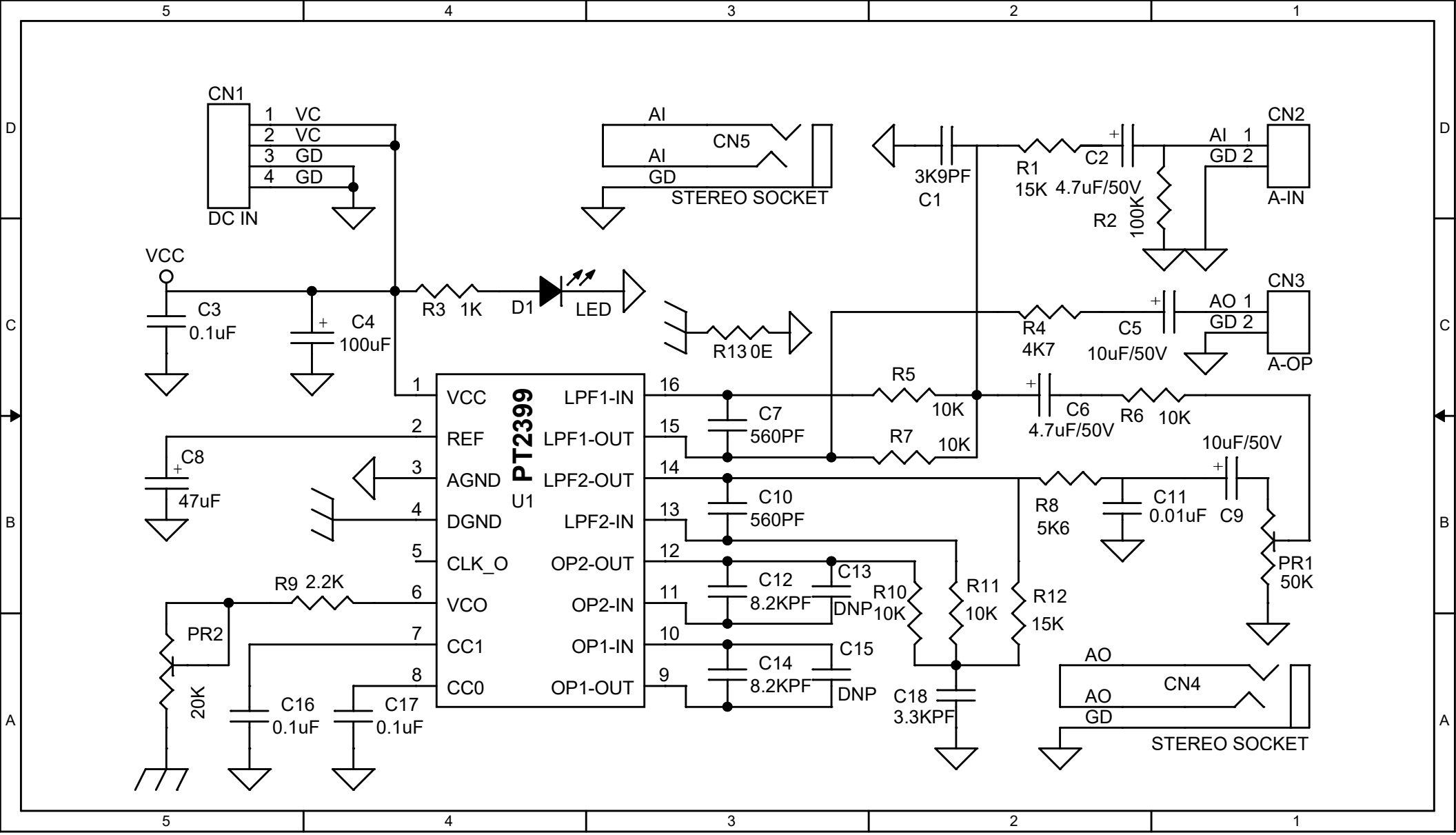

CN1
1 VC
2 VC
3 GD
4 GD
DC IN
AI
CN5
AI
GD
STEREO SOCKET
3K9PF
C1
R1
15K
C2
4.7uF/50V
R2
100K
AI 1
GD 2
CN2
A-IN
VCC
C3
0.1uF
C4
100uF
R3 1K
D1
LED
R13 0E
R4
4K7
C5
10uF/50V
AO 1
GD 2
CN3
A-OP
PT2399
U1
VCC
REF
AGND
DGND
CLK_O
VCO
CC1
CC0
LPF1-IN
LPF1-OUT
LPF2-OUT
LPF2-IN
OP2-OUT
OP2-IN
OP1-IN
OP1-OUT
C7
560PF
R5
10K
R7
10K
C6
4.7uF/50V
R6 10K
C8
47uF
C10
560PF
R8
5K6
C11
0.01uF
C9
10uF/50V
PR1
50K
C12
8.2KPF
C13
DNP
R10
10K
R11
10K
R12
15K
R9 2.2K
PR2
20K
C16
0.1uF
C17
0.1uF
C14
8.2KPF
C15
DNP
C18
3.3KPF
AO
CN4
AO
GD
STEREO SOCKET